Modbus IP Server User Guide

Preface

The GuardPointPro, since version 1.6.043, supports integration of Modbus IP. This support enables external SCADA (Supervisory Control and Data Acquisition) applications to communicate with the GuardPointPro using Modbus IP in order to receive real time data such as input/outputs status as well as sending commands to activate relays, predefined actions/processes and even opening GuardPointPro screens.

About the Protocol

MODBUS® Protocol is a messaging structure developed by Modicon in 1979, used to establish master-slave/client-server communication between intelligent devices. Modbus IP combines the Modbus protocol with the TCP/IP thus enabling implementing any device that supports TCP/IP sockets.

Integration structure

The data for each controller network (i.e., bus of controllers) in GuardPointPro is distributed on a different TCP port starting with port 503. For each one of the controllers on the bus, the GuardPointPro builds a virtual Modbus device. Each controller has its own device ID equals the controller address + 1. Controller with address 0 on GuardPointPro will receives device ID no.1 on the Modbus IP integration and so on.

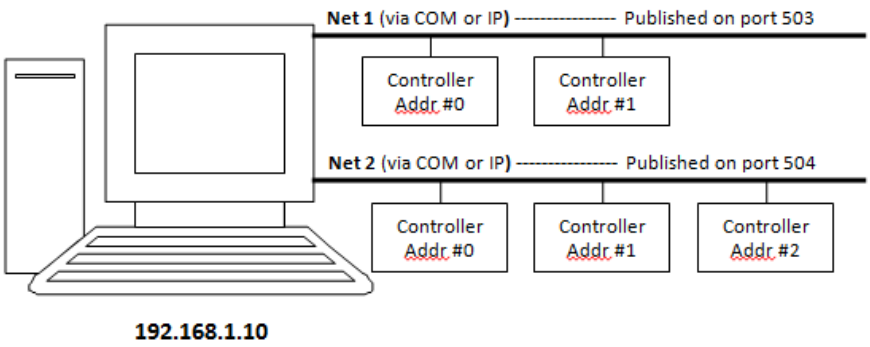

GuardPointPro		Representation in Modbus IP		
Controller Net ID	**Controller address**	**IP**	**Port**	**Device ID**
1	0	192.168.1.10	503	1
1	1	192.168.1.10	503	2
Controller Net ID	**Controller address**	**IP**	**Port**	**Device ID**
2	0	192.168.1.10	504	1
2	1	192.168.1.10	504	2
2	2	192.168.1.10	504	3

Modbus IP Server User Guide

GuardPointPro Modbus IP General Information

The goal is to integrate GuardPointPro into SCADA architecture for management and Access Control through the Modbus protocol.

The Modbus link can provide the following controller information:

- Inputs
  - o Real status of all the inputs, ON/OFF, representing the exact status of the LED
  - o Additional Status of 4 states inputs management, Normal/Line cut/Line short
  - o Alarm Status of all the input
  - o Delayed Alarm Status, indicates that the alarm is delayed, (too long time for door opening)
- Physical status of all relays. Open /Close
- Readers
  - o Denied Reason for each reader (Unknown badge, Access Granted, Denied, Granted with duress code, Denied too much trials)
  - o Id number of the last card passed at each reader
- Status of the screens on GuardPointPro for one requested PC

The Modbus link can operate the following operations in GuardPointPro:

- Inputs
  - o Input deactivation
  - o Forcing to supervise
  - o Return to normal mode
  - o Input Pulse command, setting the input to 1 during a few millisecond
- Relay control
  - o Open constant ON
  - o Constant OFF
  - o Open during 3 sec
  - o Return to normal mode
- Setting the reader crisis level
- Execute GuardPointPro Processes
- Execute GuardPointPro Actions
- Open GuardPointPro Screens on one or all the PC
- Brining to front the GPP screens
- Login GuardPointPro on one or all the PC

Modbus IP Server User Guide

How does it work?

To enable the Modbus IP Integration you need the following:

1) In the GuardPointPro.ini file, search for the line “ModbusTCP = 0” and set it to “1”

2) Also line: ModbusTCPObject = 1

2) Make sure the plug configuration includes the Modbus option and Amadeus 5 version is more than 1.6.043.

3) Define on the SCADA, the Network TCP address with the Amadeus server PC IP address, the port number and the slave address

Words linked to the Controller:

The numbers in brackets (40001, 40002, etc.) refer to the corresponding lines at the "Modbus TCP demo" application explained at the end of this document.

Word	Designation	Bit number of each value	Value number	Word Size	Read/ Write
0 (40001)	General bits of monitoring of the controller	1	16	1	
1 (40002)	Real Status of the inputs, represents the exact status of the LED, with 0 for OFF and 1 for ON, a bit by input and 16 inputs maximum per controller	1	16	1	**R**
2 (40003)	Additional Status of management 4 states, 0 for normal mode and 1 for alarm, alarm which indicates Line cut if the real status is 0 and Line short if the real status is 1, a bit by input and 16 inputs maximum per controller	1	16	1	**R**
3 (40004)	Alarm Status of the input, 0 indicates that the input is not on alarm, 1 for alarm. One bit by input and 16 inputs maximum per controller	1	16	1	**R**
4 (40005)	Delayed Alarm Status, indicates that the alarm is delayed, (too long time for door opening), a bit by input and 16 inputs maximum per controller	1	16	1	**R**
5 (40006)	Forcing to inhibit and to supervise, bypassing the WP of alarms monitoring, 00 indicates that the WP is used, 01 that alarm is deactivated and 10 that alarm is monitored. There are 16 couples of bits representing the 16 inputs of the controllers, bit 0 represents inhibition and bit 1 represents forced supervision.	2	16	2	**R/W**
7 (40008)	Input Pulse command, write only, GPP immediately resets it. Allows to manage the setting to 1 during a few millisecond of each of the 16 inputs	1	16	1	**W**
8 (40009)	Relay Real Status represents the exact status of the relay, 0 opened and 1 closed, one bit by relay and the first 16 relays managed by the controller	1	16	1	**R**
9 (40010)	Forcing to open and to close, bypassing to the automatic sequence control of the relay, 00 indicates the automatism is used, 01 the relay is forced opened and 10 the relay is forced closed. There are 16 couples of bits representing the first 16 relays of the controller, bit 0 represents open and the 1 represents closed for relay 0	2	16	2	**R/W**

12 (40013)	Denied Reason for the reader 1. The reason is 0 if access granted, if not it is the code contained in the denied table. bits 8 and 9 indicate unknown card, too important denied number etc . Additional Values to define. Bit 15 is a flip-flop which makes it possible to manage the changes arrived of new event.	16	1	1	**R**
13 (40014)	Id of the last card passed at the reader 1	16	1	1	**R**
14 (40015)	Denied Reason for the reader 2. The reason is 0 if access granted, if not it is the code contained in the denied table. bits 8 and 9 indicate unknown card, too important denied number etc . Additional Values to define. Bit 15 is a flip-flop which makes it possible to manage the changes arrived of new event.	16	1	1	**R**
15 (40016)	Id of the last card passed at the reader 2	16	1	1	**R**
16 (40017)	Denied Reason for the reader 3. The reason is 0 if access granted, if not it is the code contained in the denied table. bits 8 and 9 indicate unknown card, too important denied number etc . Additional Values to define. Bit 15 is a flip-flop which makes it possible to manage the changes arrived of new event.	16	1	1	**R**
17 (40018)	Id of the last card passed at the reader 3	16	1	1	**R**
18 (40019)	Denied Reason for the reader 4. The reason is 0 if access granted, if not it is the code contained in the denied table. bits 8 and 9 indicate unknown card, too important denied number etc . Additional Values to define. Bit 15 is a flip-flop which makes it possible to manage the changes arrived of new event.	16	1	1	**R**
19 (40020)	Id of the last card passed at the reader 4	16	1	1	**R**
20 (40021)	The 4 readers crisis level, managed by 4 bits 0-3 for the reader 0.	4	4	1	**R/W**
21 (40022)	Spare of word by reader	16	4	4	
25 (40026)	Relay Real Status represents the exact status of the relay, 0 opened and 1 closed, one bit by relay and relays 17 to 32 managed by the controller	1	16	1	**R**
26 (40027)	Forcing to open and to close, bypassing to the automatic sequence control of the relay, 00 indicates the automatism is used, 01 the relay is forced opened and 10 the relay is forced closed. There are 16 couples of bits representing the relays no. 17 to 32 of the controller, bit 0 represents open and the 1 represents closed for relay 0	2	16	2	**R/W**
28 (40029)	Relay pulse command, write only, GPP immediately resets it. Allows to manage the setting to 1 during a few seconds (3 by default) of each of the relays no.17 to 32	1	16	1	**W**
29 (40030)	Relay Real Status represents the exact status of the relay, 0 opened and 1 closed, one bit by relay and relays 33 to 48 managed by the controller	1	16	1	**R**

30 (40031)	Forcing to open and to close, bypassing to the automatic sequence control of the relay, 00 indicates the automatism is used, 01 the relay is forced opened and 10 the relay is forced closed. There are 16 couples of bits representing the relays no.33 to 48 of the controller, bit 0 represents open and the 1 represents closed for relay 0	2	16	2	**R/W**
32 (40033)	Relay pulse command, write only, GPP immediately resets it. Allows to manage the setting to 1 during a few seconds (3 by default) of each of the relays no.33 to 48	1	16	1	**W**
33 (40034)	Relay Real Status represents the exact status of the relay, 0 opened and 1 closed, one bit by relay and relays 49 to 64 managed by the controller	1	16	1	**R**
34 (40035)	Forcing to open and to close, bypassing to the automatic sequence control of the relay, 00 indicates the automatism is used, 01 the relay is forced opened and 10 the relay is forced closed. There are 16 couples of bits representing the relays no.49 to 64 of the controller, bit 0 represents open and the 1 represents closed for relay 0	2	16	2	**R/W**
36 (40037)	Relay pulse command, write only, GPP immediately resets it. Allows to manage the setting to 1 during a few seconds (3 by default) of each of the relays no.49 to 64	1	16	1	**W**

Words linked to Screens:

0	Number of the Screen to open*	32	1	2	**W**
2	Id of the WS on which the screen is open	32	1	2	**W**
4	ID number for opening the screen with a selected ID, -1 for opening with the new mode	32	1	2	**W**
6	Specific TAB number for opening the screen in the requested mode	32	1	2	**W**
8	Processes Execution, the ID of the process to execute is set by the communication and reset by GPP	32	1	2	**W**
10	Action Execution, the ID of the action to execute is set by the communication and reset by GPP	32	1	2	**W**
12	PC requested number from 0 to 15, with 0 for no request and if we have a PC ID then we ask and we control the status of this PC	16	16	16	
28	Duration in seconds (+3) of relays activation time in the pulse mode	16	1	1	
31	Status of the screens, one bit per position, indicate if the requested PC has an opened configuration screen	1	16	1	**R**
32	Ask for brining to front the GPP screens, by setting the bit corresponding to the selected position to 1 in the table of the PC numbers.	1	16	1	**W**
38	Word Table consisting on Unicode string, for each 16 bit word only one character has the following syntaxe /us=myname pw=mypwd	16	30	30	**W**
68	PC ID that ask for login, reset by GPP after execution logins and pw are synchronous, except super users that are invisible for the system	32	1	2	**W**

Modbus IP Server User Guide

Parameter:	Event Handling:	Modules:	Communication:
11: Controller Network 12: Controller 13: Daily Program 14: Weekly Program 15: Holiday 16: Access Group 17: Department 18: Badge 19: Cardholder 110: Visitor 111: User 112: Authorization Levels 113: Configuration 114: Exit 115: Logoff 116: Computer 117: Company 118: Area screen 119: Customized Fields	21: Icons 22: Map 23: Positions 24: Input Group 25: Output Group 26: Actions 27: Process 28: Counters 29: Global Reflex 210: Event Handling Program 211: Log **Manual Actions:** 51: Crisis Level 52: Output Status 53: Execute Process **View:** 81: Display Photo (also 45 to remain compatible) 82: Location Status	31: Parking Lot 32: Parking Users Group 33: Parking Zone 34: Reset Parking Zones 35: Lift Program 36: Roll Call 37: Patrol Report 38: Guard 39: Lift Authorization group 310: Checkpoint 311: Patrol Tour Prog. 312: Patrol Tour Status 313: Lift Program 314: DVR 315: Camera **Help:** 71: Help Content 72: Help 73: Help Search 74: GuardPointPro on the web 75: About	41: Polling 42: Diagnostic 43: View Log 44: Clear Log 45: View Photo **Tolls:** 61: Reports wizard 62: Create New Database 63: Save Database 64: Restore Database 65: Create New Journal 66: Save Journal 67: Restore Journal 68: Create a group of Badg-es 69: Options 610: Import database pro-file 611: Switch Data source

Modbus IP Server User Guide

Modbus TCP demo

In the GuardPointPro installation directory you can find a Modbus TCP demo application: “TCP_MDB.exe”

How to use the Modbus TCP demo:

1. Run GuardPointPro
2. Run TCP_MDB
3. Run \tcpmodbus\modex.exe

a. Put device ID = 1 (for controller adress 0)

b. Select Modbus PointType = 03 HOLDING REGISTER

c. Select length = 21

d. Select File -> Connect -> Network

e. Put full IP address (not 127.0.0.1)

f. Put Port = 503 for the first network in GuardPointPro

You will have the following screen:

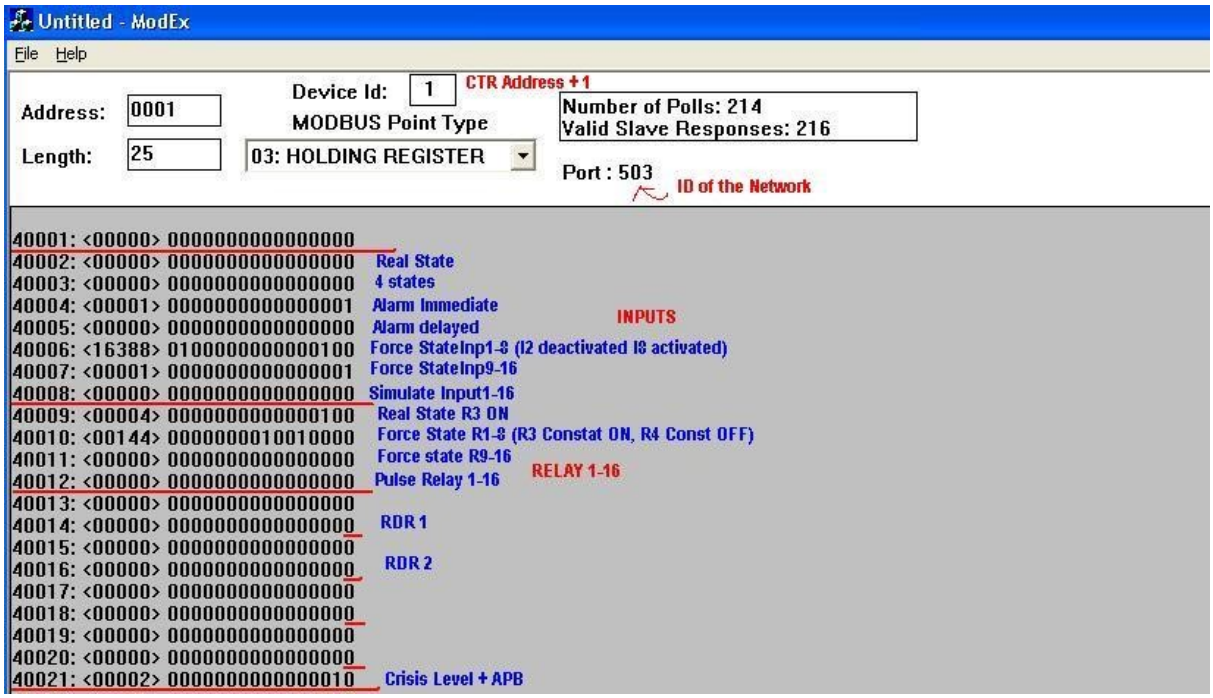

To write a value, just double click on the line number (e.g., 40001) and at the value field enter a decimal number which represents the corresponding binary value.

Examples:

To activate relay 1 (for 3 sec), go to 40012 and use the value 1. [0001(Bin) = 1(Dec)]
To activate relays 1,3&4 (for 3 sec), go to 40012 and use the value 13. [1101(Bin) = 12(Dec)]
See image:

To simulate input 3 (open relay 1), put in 40008 value 8.
To change Crisis level of rdr 1 to 1, put in 400021 value 1
To make relay 1 constant ON, put in 40010 value 1
To make relay 1 constant OFF, put in 40010 value 2
To deactivate input 1, put in 40006 value 1
To activate input 1, put in 40006 value 2